PRODUCT SHEET
Global Pro Accessories
Art. no: XTS38-3

Global Pro Accessories

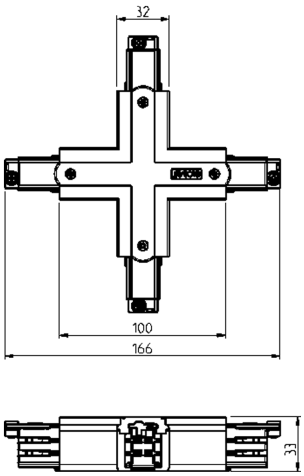

Accessories for Global Pro.

SPECIFICATIONS	
Product:	X-Feed
Dimmable:	No
Color:	White
Length:	166mm
Height:	33mm
Width:	166mm