FDV SPEC SHEET

Lobus BI

Art. no: 7012-7-30-2

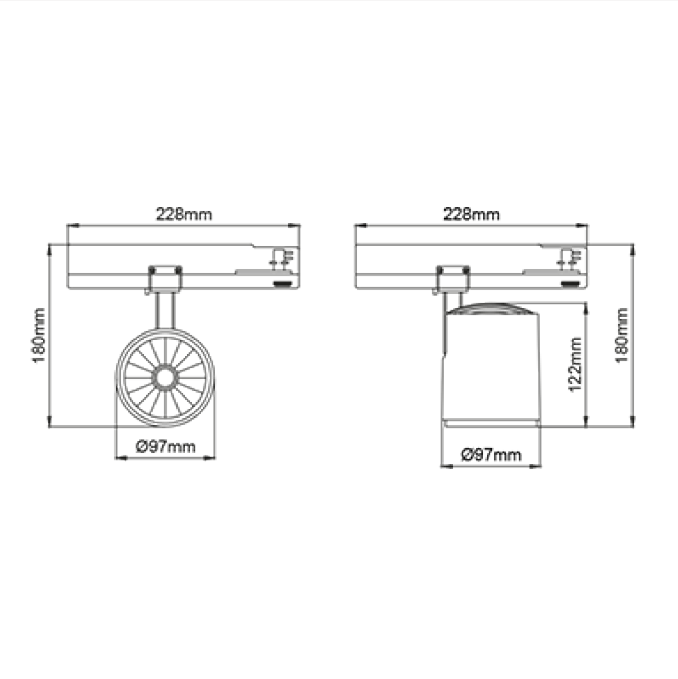

Lobus BI

IP20 | 230V 50Hz | CE

A++ - A

Art. no: 7012-7-30-2

LIGHT TECHNICAL	
Lightsource Type:	LED (built in)
Lumen Output:	3956
Lumen LED (tc=25):	4050
Beam Angle:	30°
CCT (Color Temperature):	3000
CRI / Ra:	90
Color Code:	930
MacAdam (SDCM):	3
Lens (Diffuser):	Clear

MOUNTING / CONNECTION	
Connection:	Track 3-Circuit
Mounting:	Track, Ceiling

ELECTRICAL DATA	
Dimming:	None
System Power [W]:	30
System Voltage [V]:	230V 50Hz
Protection Class:	1
Max load pr circuit - B10:	30
Max load pr circuit - B16:	50
Max load pr circuit - C10:	50
Max load pr circuit - C16:	85
Inrush current Imax [A]:	5
Inrush current time [µs]:	50
Socket / Cap-Base:	N/A
Voltage Forward Min [V]:	29,3
Voltage Forward Max [V]:	38,7

FDV SPEC SHEET

Lobus BI

Art. no: 7012-7-30-2

PRODUCT	
Ingress Protection:	IP20
Operating Temperature [°C]:	-
Lifetime [h]:	L80B10: 50.000
Color:	Black
Length [mm]:	228
Height [mm]:	180
Width [mm]:	97
Weight [kg]:	1,1