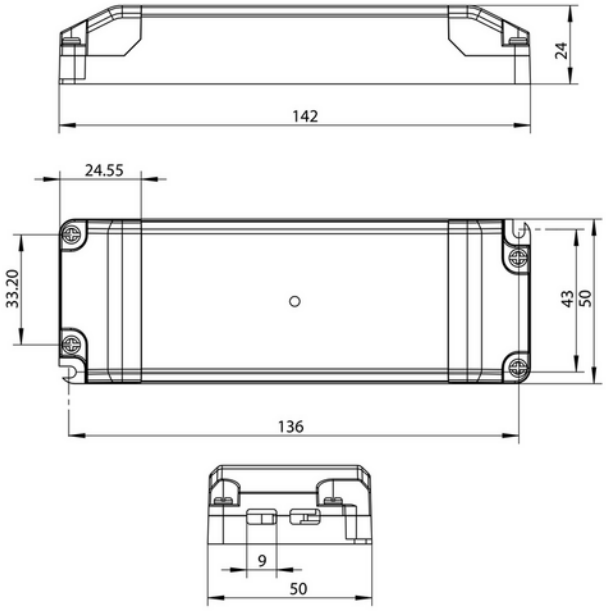

Driver 700mA cc 30W 21-43V Phasecut AcTec JB&EPN0034

230V 50Hz IP20

SPECIFICATIONS	
Operating temperature (°C)	50
CC (forward voltage driver) (V)	43.0
Inrush current time (µs)	300.0
Inrush current Imax (A)	5.0
Length (product) (mm)	142.0
Width (product) (mm)	50.0
Heigth (product) (mm)	24.0
Weight (product) (kg)	0.2