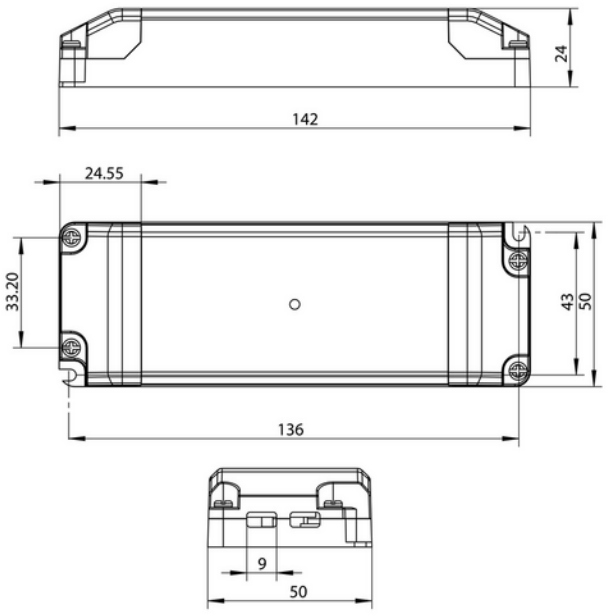

Driver 700mA cc 30W 21-43V Phasecut AcTec JB&EPN0034

230V 50Hz IP20

30W phasecut driver with junctionbox on primary side.

ELECTRICAL DATA	
Protection Class (system)	2
Dimming (system)	Phase-Cut
Voltage (system) [V]	230V 50Hz

TECHNICAL DATA	
IP (system)	IP20
Outdoor	No
Operating temperature (°C)	-20 - 50
Connection 1	QuickConnect (L+N)
Connection 2	EPN0034 female

DRIVER	
Manufacturer (driver)	AcTEC
Protection Class (driver)	2
Flicker metric (Pst LM) <	1.0
Stroboscopic effect metric (SVM) <	0.4
Max Output Voltage (V)	54
Dimming (driver)	Phase-Cut
Dimming Minimum Level (%)	1.0
Dimming Phasecut Type	Leading / Trailing edge
Dimming output type	Amplitude Modulation
IP (driver)	IP20
Expected Lifetime (driver) (h)	50000
Flicker-free	Yes
Constant current or voltage (CC or CV)	CC
CC (driver) [mA]	700 - null
CC (forward voltage driver) (V)	21.0 - 43.0
Output Current Tolerance (%)	5.0
Current Ripple (%)	15.0
Max load pr circuit - B10	35
Max load pr circuit - B16	56
Max load pr circuit - C10	52
Max load pr circuit - C16	84
Max load pr circuit - C20	105
Max load pr circuit - C25	185
Leakage current (mA)	0.7
Inrush current time (µs)	300.0
Inrush current Imax (A)	5.0

DIMENSIONS	
Length (product) (mm)	142.0
Width (product) (mm)	50.0
Heigth (product) (mm)	24.0
Weight (product) (kg)	0.2

INSTALLATION AND CONNECTION	
Connection (system)	QuickConnect

ENERGY AND CERTIFICATIONS	
CE mark	Yes