

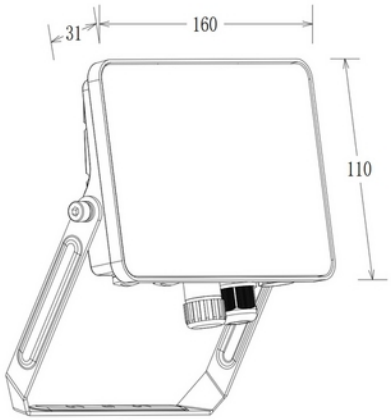

Michelle G2 Flood 3550lm 830 30/20/15W IP65 0,6m cable BK

CE 230V 50Hz IP65 IK06

E A↑G

SPECIFICATIONS	
Type of Dimming (system)	None
IK	IK06
Operating temperature (°C)	50
Color Code	830
Lightsource Type	LED (built in)
Socket / Cap-Base	N/A
Lifetime (h)	L80B10: 100 000
MacAdam (SDCM)	3
Dimming (driver)	None
Constant current or voltage (CC or CV)	CC
Inrush current time (µs)	0.5
Inrush current Imax (A)	5.32

SPECIFICATIONS	
Length (product) (mm)	160.0
Width (product) (mm)	31.0
Heigth (product) (mm)	110.0
Weight (product) (kg)	0.6
Color	Black
RAL Code	RAL9005
Mounting	Wall
Connection (system)	Cable 0.6m