

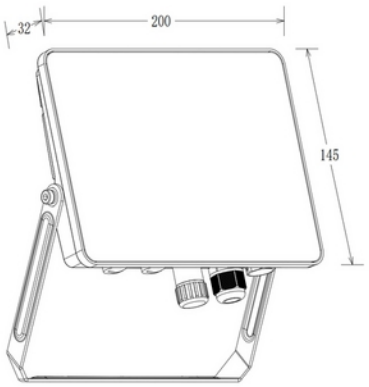

Michelle G2 Flood 5400lm 830 50/40/30W IP65 0,6m cable BK

CE 230V 50Hz IP65 IK06

E A G

SPECIFICATIONS	
Type of Dimming (system)	None
IK	IK06
Operating temperature (°C)	50
Color Code	830
Lightsource Type	LED (built in)
Socket / Cap-Base	N/A
Lifetime (h)	L80B10: 100 000
MacAdam (SDCM)	3
Protection Class (driver)	1
Dimming (driver)	None
Constant current or voltage (CC or CV)	CC
Inrush current time (µs)	0.48

SPECIFICATIONS	
Inrush current Imax (A)	6.36
Length (product) (mm)	200.0
Width (product) (mm)	32.0
Heigth (product) (mm)	145.0
Weight (product) (kg)	0.95
Color	Black
RAL Code	RAL9005
Mounting	Wall
Connection (system)	Cable 0.6m