PRODUCT DATA SHEET
Michelle G2 Flood 5400lm 830 50/40/30W IP65 0,6m cable BK
Art.no: 101127-2-2



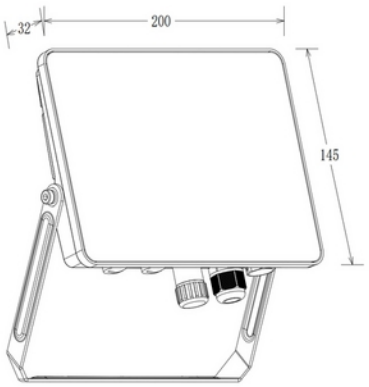

Michelle G2 Flood 5400lm 830 50/40/30W IP65 0,6m cable BK

ELECTRICAL DATA	
Protection Class (system)	1
Dimming (system)	None
Voltage (system) [V]	230V 50Hz

TECHNICAL DATA	
IK (system)	IK06
IP (system)	IP65
Outdoor	Yes
Operating temperature (°C)	-20 - 50

PHOTOMETRIC DATA	
Efficacy (system) (lm/W)	108
CRI / Ra (>=)	80
CCT (Color Temperature) (K)	3000
Color Code	830
Lightsource Type	LED (built in)
Socket / Cap-Base	N/A
Lens (Diffuser)	PC/Glass
Lifetime (h) IEC 62717	L80B10: 100 000
MacAdam (SDCM)	3

DRIVER	
Manufacturer (driver)	Up-Shine
Protection Class (driver)	1
Standby power Psb (W) <	0.5
Flicker metric (Pst LM) <	1.0
Stroboscopic effect metric (SVM) <	0.4
Dimming (driver)	None
IP (driver)	IP20
Expected Lifetime (driver) (h)	100000
Flicker-free	Yes
Constant current or voltage (CC or CV)	CC
Current setting (driver)	DIP-switch
Surge Protection	L-N = 1KV
Max load pr circuit - B10	26
Max load pr circuit - B16	41
Max load pr circuit - C10	26
Max load pr circuit - C16	41
Max load pr circuit - C20	51
Inrush current time (µs)	0.48
Inrush current Imax (A)	6.36

DIMENSIONS	
Length (product) (mm)	200.0
Width (product) (mm)	32.0
Heigth (product) (mm)	145.0

DIMENSIONS	
Weight (product) (kg)	0.95

MATERIALS AND SURFACES	
Color	Black
RAL Code	RAL9005
Surface treatment	Powdercoated
Housing Material	Aluminium
Diffuser Material	Polycarbonate

INSTALLATION AND CONNECTION	
Areas of use	Cottage, Facade, Outdoor, Residence
Mounting	Wall
Connection (system)	Cable 0.6m

ENERGY AND CERTIFICATIONS	
Energy Class EPREL	E
CE mark	Yes