FDV DOCUMENTATION
Zoom 950lm 830 6-60° 20W 3-circuit BK
Art.no: 101140-660-2



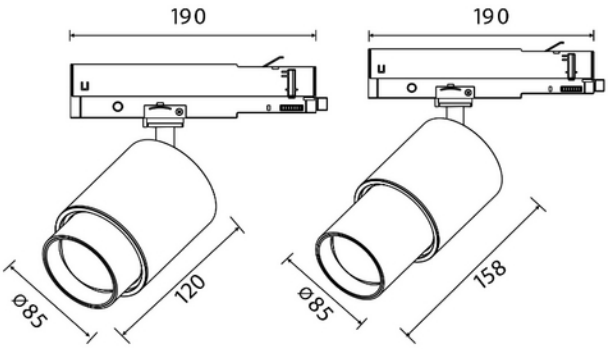

Zoom 950lm 830 6-60° 20W 3-circuit BK

CE 230V 50Hz IP20

SPECIFICATIONS	
Type of Dimming (system)	None
Color Code	830
Lightsource Type	LED (built in)
Socket / Cap-Base	N/A
Lifetime (h)	L80B10: 100 000
MacAdam (SDCM)	3
Length (product) (mm)	158.0
Weight (product) (kg)	1.0
Diameter (product) (mm)	85.0
Color	Black
Mounting	Track
Connection (system)	Track 3-Circuit