PRODUCT DATA SHEET
Zoom 950lm 830 6-60° 20W 3-circuit BK
Art.no: 101140-660-2



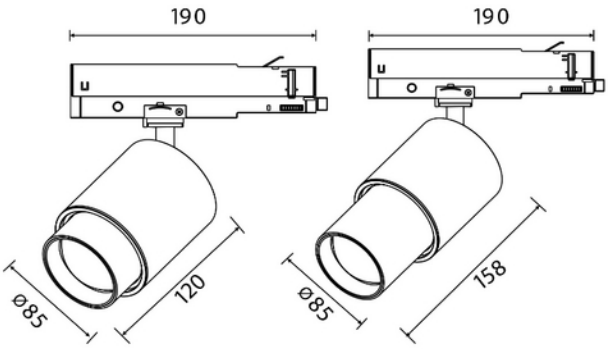

Zoom 950lm 830 6-60° 20W 3-circuit BK

230V 50Hz IP20

The unique zoom patent makes it possible to vary the beam angel between 6 and 60 degrees making this model highly versatile. The Zoom is available in both black and white versions and is made from robust die-cast aluminum.

ELECTRICAL DATA	
Protection Class (system)	1
Dimming (system)	None
Voltage (system) [V]	230V 50Hz

TECHNICAL DATA	
IP (system)	IP20
Outdoor	Yes

PHOTOMETRIC DATA	
CRI / Ra (>=)	80
CCT (Color Temperature) (K)	3000

PHOTOMETRIC DATA	
Color Code	830
Lightsource Type	LED (built in)
Socket / Cap-Base	N/A
Lens (Diffuser)	Clear
Lifetime (h) IEC 62717	L80B10: 100 000
MacAdam (SDCM)	3
Manufacturer (light source)	Lumileds

DRIVER	
Manufacturer (driver)	Osram

DIMENSIONS	
Length (product) (mm)	158.0
Weight (product) (kg)	1.0
Diameter (product) (mm)	85.0

MATERIALS AND SURFACES	
Color	Black
Housing Material	Aluminium

INSTALLATION AND CONNECTION	
Areas of use	Hotel, Museum
Mounting	Track
Connection (system)	Track 3-Circuit

ENERGY AND CERTIFICATIONS	
CE mark	Yes