PRODUCT DATA SHEET
Zoom 1750lm 927 6-60° 20W 3-circuit BK phasecut
Art.no: 101141-660-2-p



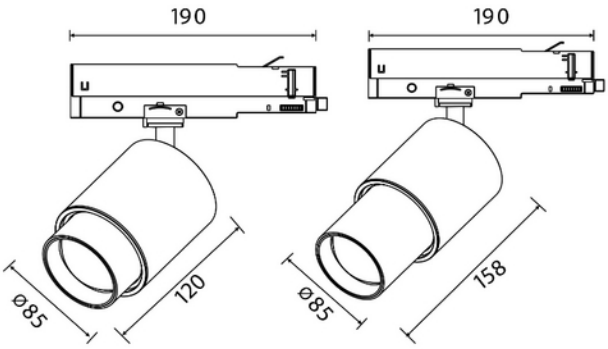

Zoom 1750lm 927 6-60° 20W 3-circuit BK phasecut

230V 50Hz IP20

The unique zoom patent makes it possible to vary the beam angel between 6 and 60 degrees making this model highly versatile. The Zoom is available in both black and white versions and is made from robust die-cast aluminum.

ELECTRICAL DATA	
Protection Class (system)	1
Dimming (system)	Phase-Cut
Voltage (system) [V]	230V 50Hz
Power (system) (W)	20

TECHNICAL DATA	
IP (system)	IP20
Outdoor	Yes

PHOTOMETRIC DATA	
CRI / Ra (>=)	90

PHOTOMETRIC DATA	
CCT (Color Temperature) (K)	2700
Color Code	927
Lightsource Type	LED (built in)
Socket / Cap-Base	N/A
Lens (Diffuser)	Clear
Lifetime (h) IEC 62717	L80B10: 100 000
MacAdam (SDCM)	3
Manufacturer (light source)	Citizen
Forwrard Voltage LED (max tp=25) (V)	40.0
Driftspenning LED (min tp=65) (V)	35.0

DRIVER	
Manufacturer (driver)	HEP
Protection Class (driver)	2
Flicker metric (Pst LM) <	1.0
Stroboscopic effect metric (SVM) <	0.4
Dimming (driver)	Phase-Cut
Dimming Minimum Level (%)	10.0
Dimming Phasecut Type	Trailing edge
Dimming output type	Amplitude Modulation
IP (driver)	IP20
Flicker-free	Yes
Constant current or voltage (CC or CV)	CC
CC (driver) [mA]	250 - 500
Current setting (driver)	DIP-switch
CC (forward voltage driver) (V)	25.0 - 40.0
Output Current Tolerance (%)	5.0
Current Ripple (%)	5.0
Max load pr circuit - B10	28
Max load pr circuit - B16	46
Max load pr circuit - C10	28
Max load pr circuit - C16	46
Max load pr circuit - C20	57
Inrush current time (µs)	40.0
Inrush current Imax (A)	15.0

DIMENSIONS	
Length (product) (mm)	158.0
Weight (product) (kg)	1.0
Diameter (product) (mm)	85.0

MATERIALS AND SURFACES	
Color	Black
RAL Code	RAL9005
Housing Material	Aluminium

INSTALLATION AND CONNECTION	
Areas of use	Museum, Shop, Showroom
Mounting	Track
Connection (system)	Track 3-Circuit

ENERGY AND CERTIFICATIONS	
CE mark	Yes