FDV DOCUMENTATION
Zoom 1750lm 927 6-60° 20W 3-circuit WH DALI
Art.no: 101141-660-3-ddd



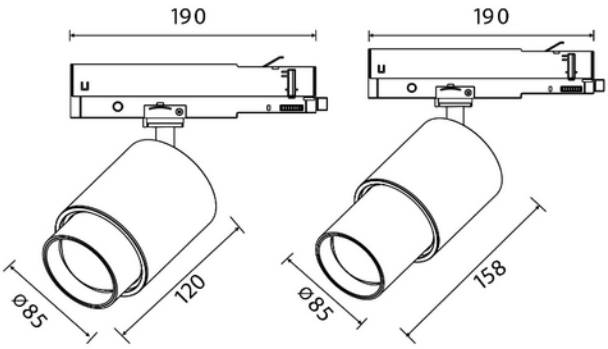

Zoom 1750lm 927 6-60° 20W 3-circuit WH DALI

CE 230V 50Hz IP20

SPECIFICATIONS	
Power (system) (W)	20
Type of Dimming (system)	DALI2
Color Code	927
Lightsource Type	LED (built in)
Socket / Cap-Base	N/A
Lifetime (h)	L80B10: 100 000
MacAdam (SDCM)	3
Forwrard Voltage LED (max tp=25) (V)	40.0
Forward Voltage LED (min tp=65) (V)	35.0
Protection Class (driver)	2
Dimming (driver)	DALI2
CC (driver) [mA]	600
CC (forward voltage driver) (V)	42.0

SPECIFICATIONS	
Inrush current time (µs)	80.0
Inrush current Imax (A)	35.0
Length (product) (mm)	158.0
Weight (product) (kg)	1.0
Diameter (product) (mm)	85.0
Color	White
RAL Code	RAL9003
Mounting	Track
Connection (system)	Track 3-Circuit+dim