FDV DOCUMENTATION
Zoom 1750lm 927 6-60° 20W 3-circuit WH phasecut
Art.no: 101141-660-3-p



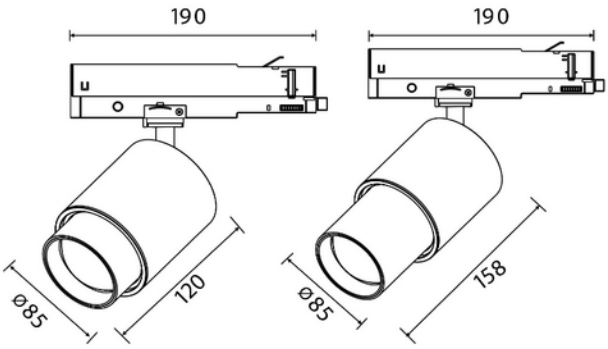

Zoom 1750lm 927 6-60° 20W 3-circuit WH phasecut

CE 230V 50Hz IP20

SPECIFICATIONS	
Power (system) (W)	20
Type of Dimming (system)	Phase-Cut
Color Code	927
Lightsource Type	LED (built in)
Socket / Cap-Base	N/A
Lifetime (h)	L80B10: 100 000
MacAdam (SDCM)	3
Forwrard Voltage LED (max tp=25) (V)	40.0
Forward Voltage LED (min tp=65) (V)	35.0
Protection Class (driver)	2
Dimming (driver)	Phase-Cut
Constant current or voltage (CC or CV)	CC
CC (driver) [mA]	500

SPECIFICATIONS	
CC (forward voltage driver) (V)	40.0
Inrush current time (µs)	40.0
Inrush current Imax (A)	15.0
Length (product) (mm)	158.0
Weight (product) (kg)	1.0
Diameter (product) (mm)	85.0
Color	White
RAL Code	RAL9003
Mounting	Track
Connection (system)	Track 3-Circuit