FDV DOCUMENTATION
Zoom 1850lm 930 6-60° 20W 3-circuit BK phasecut
Art.no: 101142-660-2-p



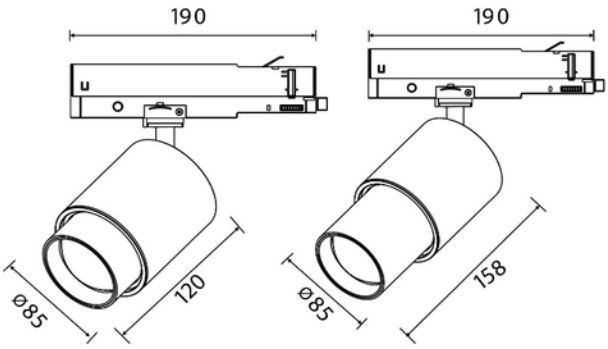

Zoom 1850lm 930 6-60° 20W 3-circuit BK phasecut

CE 230V 50Hz IP20

SPECIFICATIONS	
Power (system) (W)	20
Type of Dimming (system)	Phase-Cut
Color Code	930
Lightsource Type	LED (built in)
Socket / Cap-Base	N/A
Lifetime (h)	L80B10: 100 000
MacAdam (SDCM)	3
Forwrard Voltage LED (max tp=25) (V)	40.0
Forward Voltage LED (min tp=65) (V)	35.0
Protection Class (driver)	2
Dimming (driver)	Phase-Cut
Constant current or voltage (CC or CV)	CC
CC (driver) [mA]	500

SPECIFICATIONS	
CC (forward voltage driver) (V)	40.0
Inrush current time (µs)	40.0
Inrush current Imax (A)	15.0
Length (product) (mm)	158.0
Weight (product) (kg)	1.0
Diameter (product) (mm)	85.0
Color	Black
RAL Code	RAL9005
Mounting	Track
Connection (system)	Track 3-Circuit