

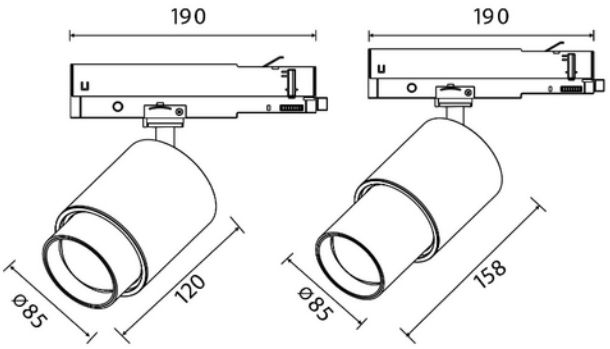

Zoom 1850lm 930 6-60° 20W 3-circuit WH DALI

SPECIFICATIONS	
Power (system) (W)	20
Type of Dimming (system)	DALI2
Color Code	930
Lightsource Type	LED (built in)
Socket / Cap-Base	N/A
Lifetime (h)	L80B10: 100 000
MacAdam (SDCM)	3
Forwrard Voltage LED (max tp=25) (V)	40.0
Forward Voltage LED (min tp=65) (V)	35.0
Protection Class (driver)	2
Dimming (driver)	DALI2
Constant current or voltage (CC or CV)	CC
CC (driver) [mA]	600

SPECIFICATIONS	
CC (forward voltage driver) (V)	42.0
Inrush current time (µs)	80.0
Inrush current Imax (A)	35.0
Length (product) (mm)	158.0
Weight (product) (kg)	1.0
Diameter (product) (mm)	85.0
Color	White
RAL Code	RAL9003
Mounting	Track
Connection (system)	Track 3-Circuit+dim