

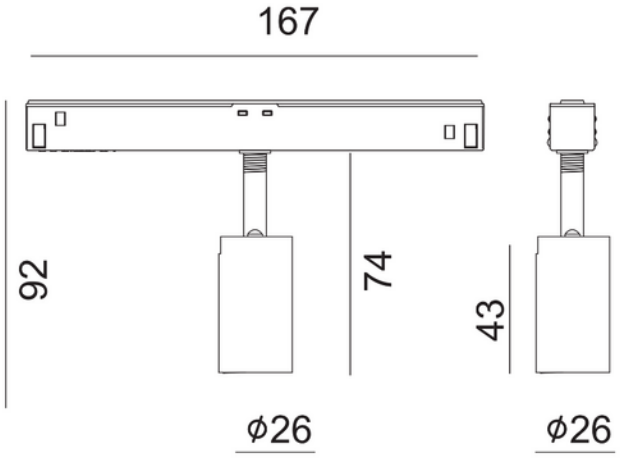

Flare 26 927 210lm 23° 2W Evo WH DALI

SPECIFICATIONS	
Type of Dimming (system)	DALI
Color Code	927
Socket / Cap-Base	N/A
Constant current or voltage (CC or CV)	CC
CC (driver) [mA]	700
CC (forward voltage driver) (V)	40.0
Length (product) (mm)	74.0
Width (product) (mm)	26.0
Diameter (product) (mm)	26.0
Color	White
Mounting	Track
Connection (system)	Track EVO 48V

LIGHT DISTRIBUTION

