PRODUCT DATA SHEET
Flare 26 927 210lm 23° 2W Evo WH DALI
Art.no: 101470-23-3-ddd



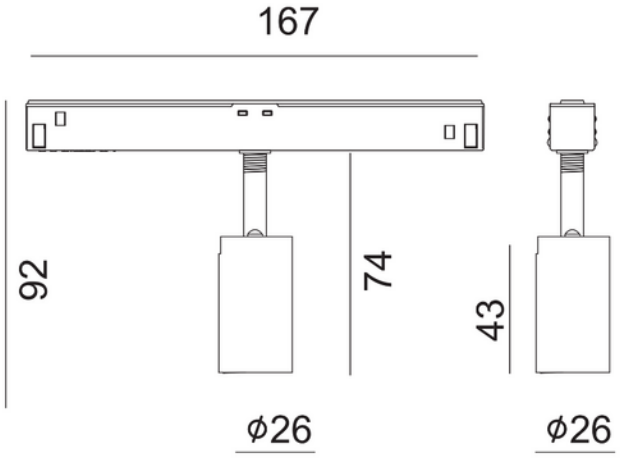

Flare 26 927 210lm 23° 2W Evo WH DALI

Flare26 is a spotlight that fits our Evo 48V Track system. With 2W, high lumen output, this is a spotlight perfect for housing, stores, restaurants, hotels and office environments. The spotlights can be adjusted in all angles to fit every need. Can be tilted 90 degrees and 350 degrees rotatable around its own axis.

ELECTRICAL DATA	
Protection Class (system)	3
Dimming (system)	DALI
Voltage (system) [V]	48VDC

TECHNICAL DATA	
IP (system)	IP20
Outdoor	No

PHOTOMETRIC DATA	
Efficacy (system) (lm/W)	105

PHOTOMETRIC DATA	
CRI / Ra (>=)	90
CCT (Color Temperature) (K)	2700
Color Code	927
Socket / Cap-Base	N/A
Manufacturer (light source)	Osram

DRIVER	
Manufacturer (driver)	HEP
Standby power Psb (W) <	0.5
Max Output Voltage (V)	48
Dimming Minimum Level (%)	5.0
Dimming output type	Amplitude Modulation
Expected Lifetime (driver) (h)	50000
Constant current or voltage (CC or CV)	CC
CC (driver) [mA]	350 - 700
CC (forward voltage driver) (V)	6.0 - 40.0
Output Current Tolerance (%)	5.0
Current Ripple (%)	5.0

DIMENSIONS	
Length (product) (mm)	74.0
Width (product) (mm)	26.0
Diameter (product) (mm)	26.0

MATERIALS AND SURFACES	
Color	White

INSTALLATION AND CONNECTION	
Areas of use	Cottage, Hotel, Residence, Restaurant
Mounting	Track
Connection (system)	Track EVO 48V

ENERGY AND CERTIFICATIONS	
Energy Class EPREL	G

ENERGY AND CERTIFICATIONS	
CE mark	Yes

LIGHT DISTRIBUTION

