PRODUCT DATA SHEET
Tigrus Tiltable 550lm 7W 930 36° BK Phasecut Isosafe
Art.no: 24930-36-2



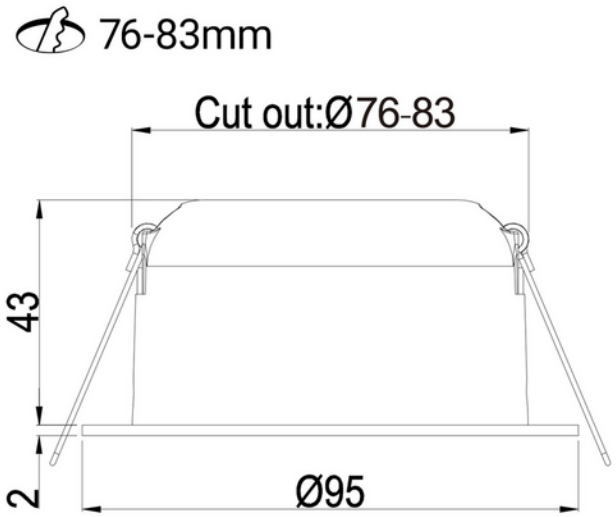

Tigrus Tiltable 550lm 7W 930 36° BK Phasecut Isosafe

230V 50Hz | IP44 | IK02

Tigrus Tiltable can be mounted directly in insulation. Tigrus has CRI>95 and is delivered with 2700K or Dim2Warm. The downlight can be tilted 25°. Easy to connect without using a screwdriver. Cut-out 76-83mm.

ELECTRICAL DATA	
Protection Class (system)	2
Dimming (system)	Phase-Cut
Voltage (system) [V]	230V 50Hz
Emergency light (h)	No Emergency light

TECHNICAL DATA	
IK (system)	IK02
IP (system)	IP44
IP Front/Back (system)	IP40/20
Outdoor	No
Operating temperature (°C)	-20 - 45

PHOTOMETRIC DATA	
Efficacy (system) (lm/W)	79
CRI / Ra (>=)	95
CCT (Color Temperature) (K)	3000
Color Code	930
Lightsource Type	LED (built in)
Socket / Cap-Base	N/A
Lens (Diffuser)	Clear
Lifetime (h) IEC 62717	L80: 100 000
MacAdam (SDCM)	3
UGR (<=)	23
Manufacturer (light source)	Sunpu
Manufacture Description (COB)	GP16-302F0305-1005VA
Forward Current LED (min-max) (mA)	200 - 450
Forwrard Voltage LED (max tp=25) (V)	17.5
Driftspenning LED (min tp=65) (V)	12.0

DRIVER	
Manufacturer (driver)	AcTEC
Protection Class (driver)	2
Standby power Psb (W) <	0.5
Flicker metric (Pst LM) <	1.0
Stroboscopic effect metric (SVM) <	0.4
Max Output Voltage (V)	26
Dimming (driver)	Phase-Cut
Dimming Minimum Level (%)	1.0
Dimming Phasecut Type	Leading / Trailing edge
Dimming output type	Amplitude Modulation
IP (driver)	IP20
Expected Lifetime (driver) (h)	50000
Flicker-free	Yes
Constant current or voltage (CC or CV)	CC
CC (driver) [mA]	332 - 367
Current setting (driver)	None
CC (forward voltage driver) (V)	13.0 - 26.0

DRIVER	
CV (driver) [V]	15
Output Current Tolerance (%)	5.0
Current Ripple (%)	5.0
Max load pr circuit - B10	35
Max load pr circuit - B16	182
Max load pr circuit - C10	280
Max load pr circuit - C16	448
Max load pr circuit - C20	560
Max load pr circuit - C25	700
Max load pr circuit - C32	800
Leakage current (mA)	5.0
Inrush current time (µs)	100.0
Inrush current Imax (A)	5.0

DIMENSIONS	
Width (product) (mm)	95.0
Heigth (product) (mm)	45.0
Weight (product) (kg)	0.37
Diameter (product) (mm)	95.0

MATERIALS AND SURFACES	
Color	Black
RAL Code	RAL9005
Corrosion Class	C1
Surface treatment	Powdercoated
Housing Material	Aluminium
Diffuser Material	Aluminium

INSTALLATION AND CONNECTION	
Areas of use	Bathroom, Cafe, Cottage, Hotel, Kitchen, Office, Residence, Restaurant
Mounting	Recessed
Connection (system)	QuickConnect

ENERGY AND CERTIFICATIONS	
Energy Class EPREL	F
CE mark	Yes

ALTERNATIVE DRIVERS	
Current Setting (mA) ?	350
Current Setting Existing Driver	13 - 18

LIGHT DISTRIBUTION

