

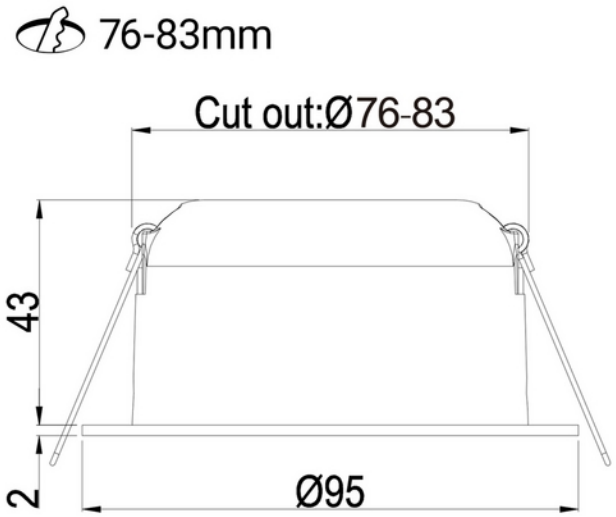

Tigrus Tiltable 550lm 7W 930 36° WH Phasecut Isosafe

230V 50Hz | IP44 | IK02

SPECIFICATIONS	
Type of Dimming (system)	Phase-Cut
IK	IK02
Operating temperature (°C)	45
Color Code	930
Lightsource Type	LED (built in)
Socket / Cap-Base	N/A
Lifetime (h)	L80: 100 000
MacAdam (SDCM)	3
Forwrard Voltage LED (max tp=25) (V)	17.5
Forward Voltage LED (min tp=65) (V)	12.0
Protection Class (driver)	2
Dimming (driver)	Phase-Cut
Constant current or voltage (CC or CV)	CC

SPECIFICATIONS	
CC (driver) [mA]	367
CC (forward voltage driver) (V)	26.0
Inrush current time (µs)	100.0
Inrush current Imax (A)	5.0
Width (product) (mm)	95.0
Heigth (product) (mm)	45.0
Weight (product) (kg)	0.37
Diameter (product) (mm)	95.0
Color	White
RAL Code	RAL9010
Mounting	Recessed
Connection (system)	QuickConnect
Emergency light (h)	No Emergency light

LIGHT DISTRIBUTION

