

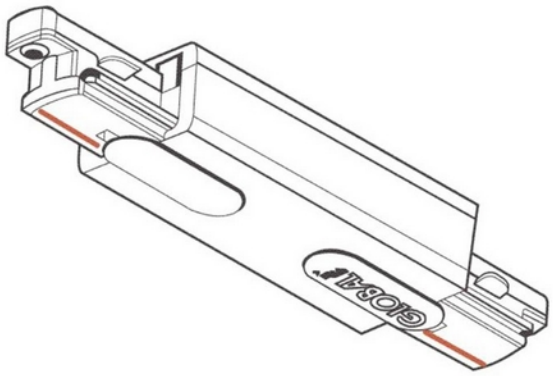

Global Base Middle Feed 1-circuit GR

SPECIFICATIONS	
RAL Code	AW202JR