

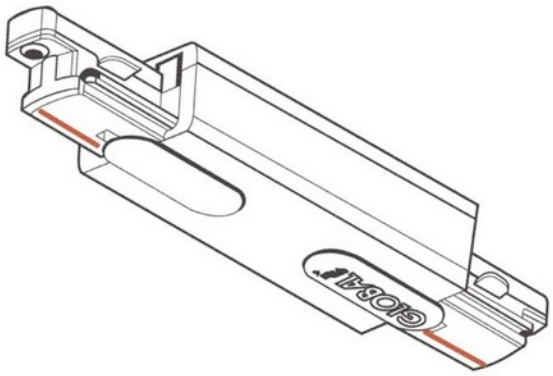

Global Base Middle Feed 1-circuit GR

MATERIALS AND SURFACES	
Color	Grey
RAL Code	AW202JR