

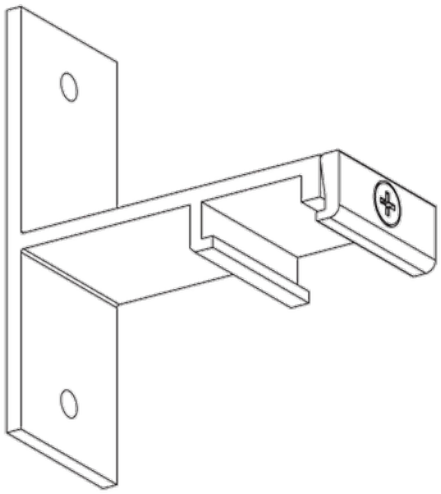

Global Pro/Pulse Wall Clamp 10kg GR

SPECIFICATIONS	
RAL Code	AW202JR