

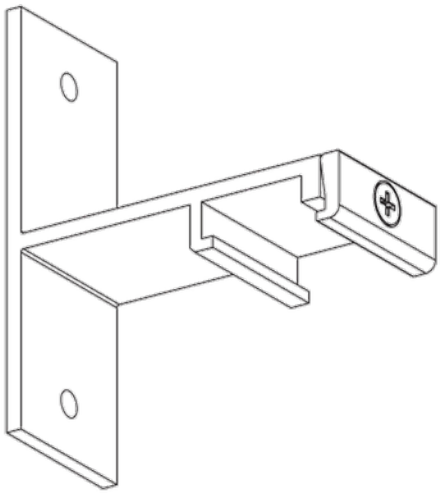

Global Pro/Pulse Wall Clamp 10kg GR

TECHNICAL DATA	
Pull strength (N)	100.0
Track Subgroup	Wall Clamp

MATERIALS AND SURFACES	
Color	Grey
RAL Code	AW202JR